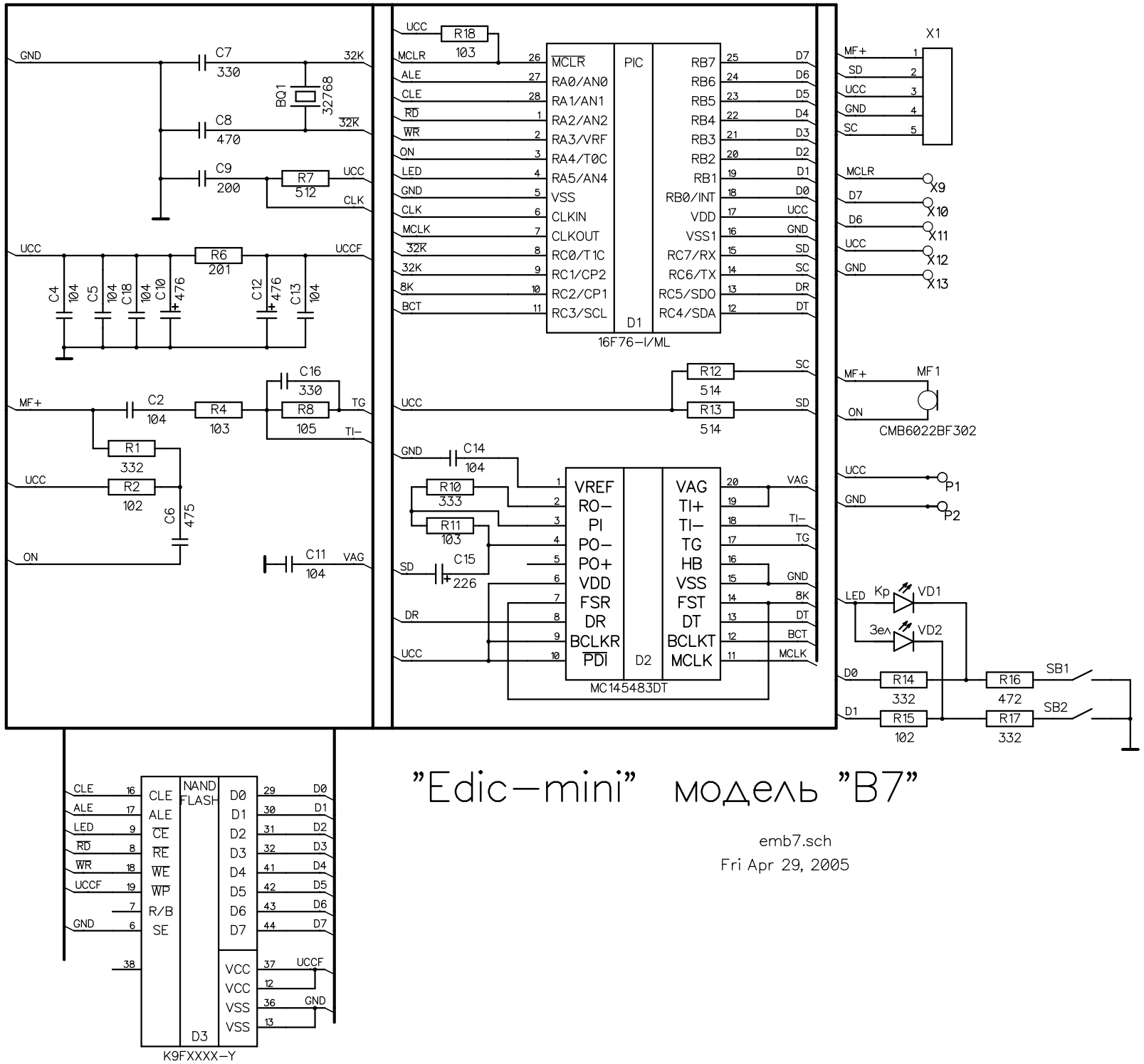

"Edic–mini" модель "B7"

emb7.sch

Fri Apr 29, 2005